Apr.1.2017 Copyright 2017 HIROSE ELECTRIC CO., LTD. All Rights Reserved.

| COUNT | DESCRIPTION OF REVISIONS | BY | CHKD | DATE | COUNT | DESCRIPTION OF REVISIONS | BY | CHKD | DATE |
|---|---|---|---|---|---|---|---|---|---|
| △ | | | | . . | △ | | | | . . |
| △ | | | | . . | △ | | | | . . |
| △ | | | | . . | △ | | | | . . |

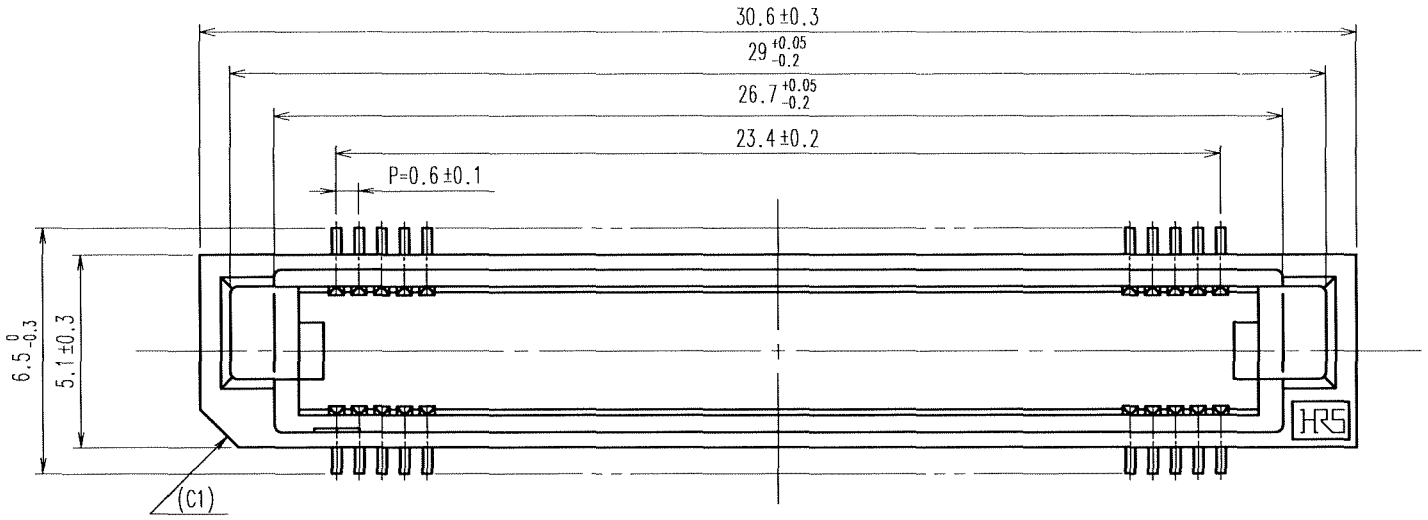


RECOMMENDED LAND PATTERN DIMENSION OF PCB (MOUNTING SIDE) (2:1)

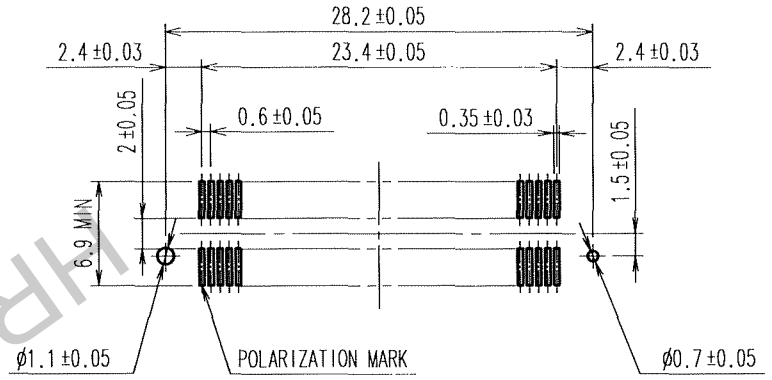


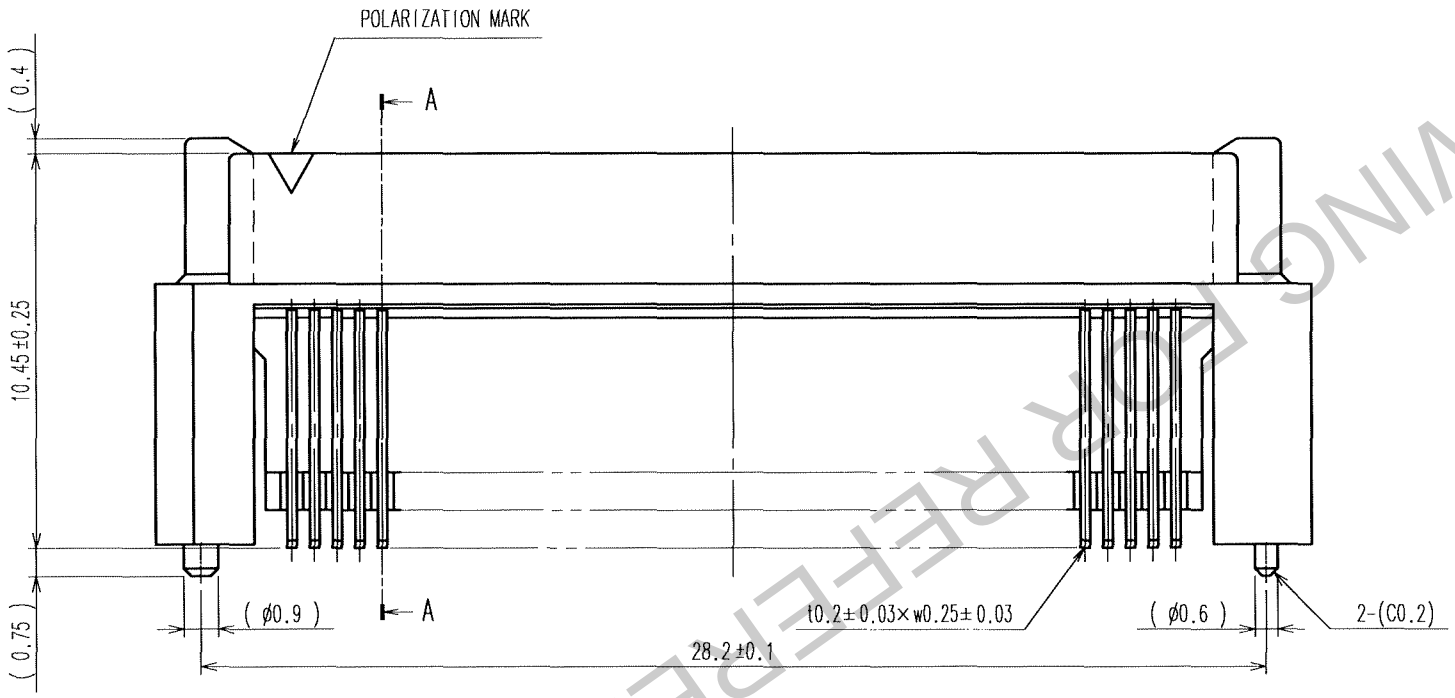


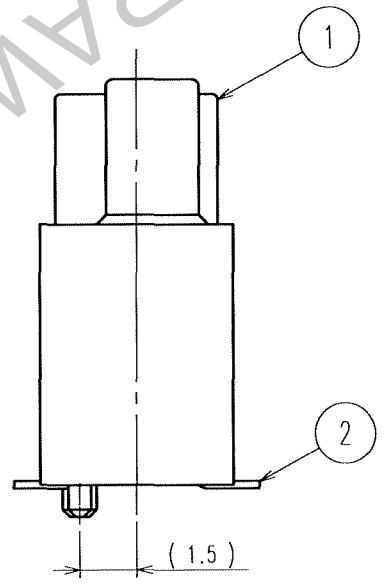


A－A

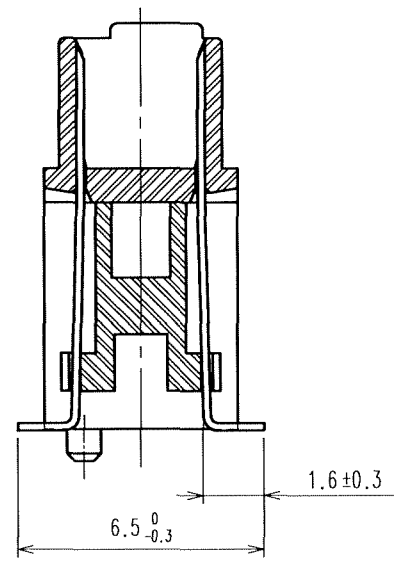


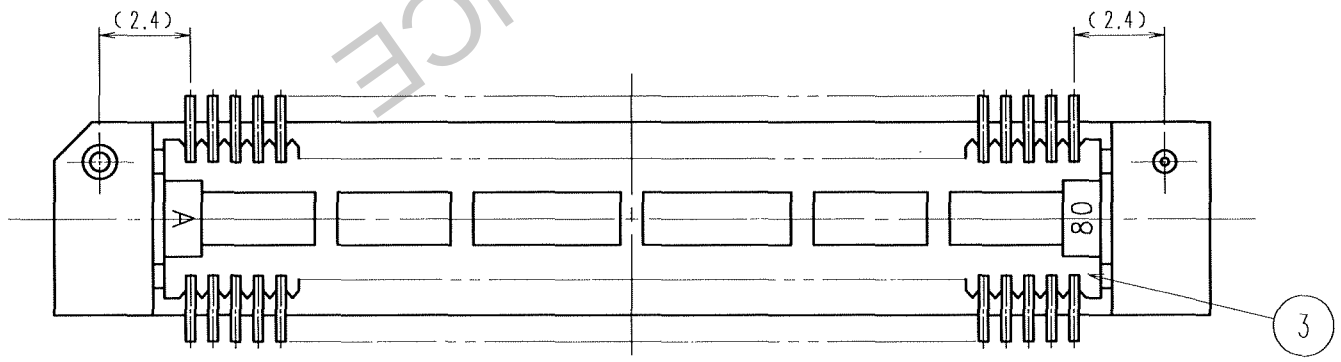


NOTE 1. LEAD CO-PLANARITY SHALL BE 0.1mm MAX.
2. FOR MODIFICATION,ETC.,PREVENTIVE HOLE FOR SINK MARK MAY BE ADDED ACCORDING TO CIRCUMSTANCES.
3. THE DIMENSIONS IN PARENTHESES ARE FOR REFERENCE.

| NO. | MATERIAL | FINISH, REMARKS | NO. | MATERIAL | FINISH, REMARKS |
|---|---|---|---|---|---|
| 1、3 | PPS | LIGHT BROWN (UL94V-0) | 2 | PHOSPHOR BRONZE | CONTACT AREA:GOLD 0.1μm min.<br>LEAD AREA:TIN-PLATING 1μm min.<br>UNDER PLATING:NICKEL 1μm min. |

| CODE NO.(OLD) | DRAWN | DESIGNED | CHECKED | APPROVED | RELEASED |
|---|---|---|---|---|---|
| CL | K.NAKAMURA 05.11.18 | K.NAKAMURA 05.11.18 | K.Ozawa '05.11.21 | H.Okawa '05.11.21 | |

SCALE 5 : 1
UNITS mm

DRAWING NO. EDC3-150872-25

PART NO. FX8C-80P-SV6(71)

HRS HIROSE ELECTRIC CO.,LTD.

CODE NO. CL578-0603-9-71

1/1

FORM NO.229

| TO |
|---|
| PCK |

HRS DRAWING FOR REFERENCE